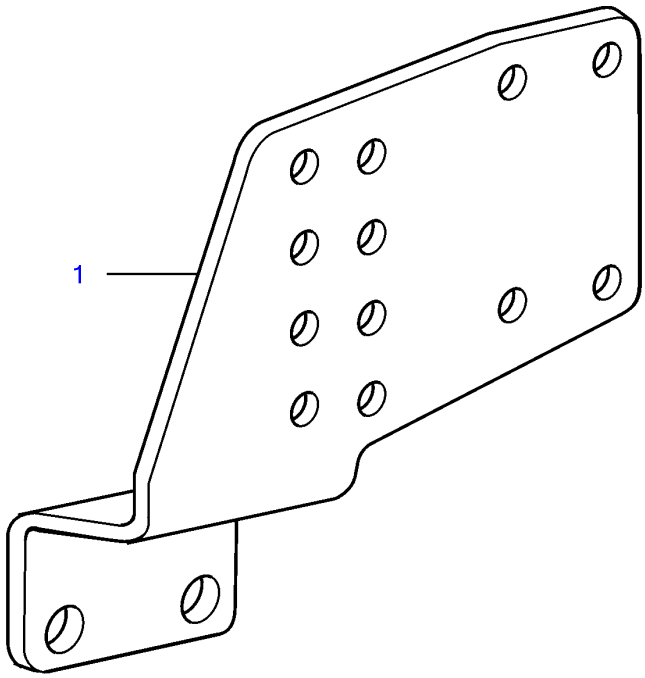

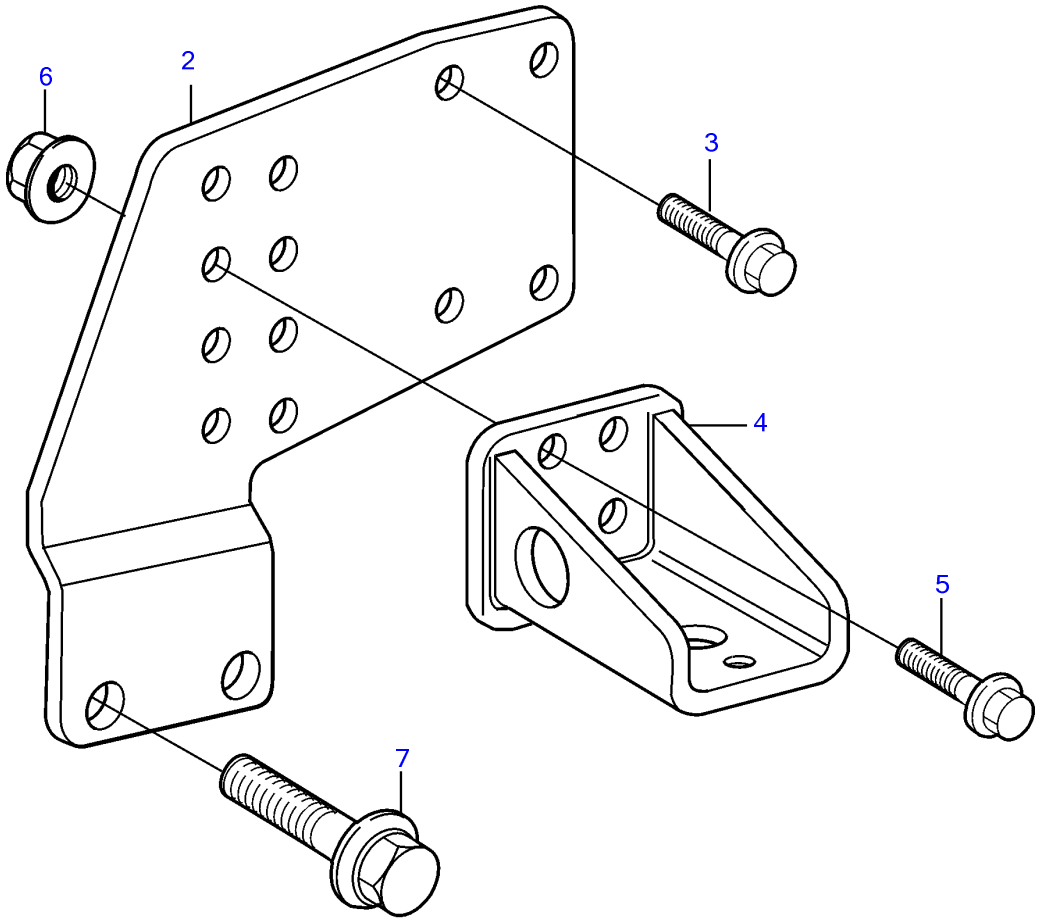

17520

REF	PART NO.	QTY	DESCRIPTION	NOTES
1	(3828738)	1	Bracket	S.B
2	(3828737)	1	Bracket	P
3	965225	8	Flange screw	
4	848369	2	Bracket	
5	965225	8	Flange screw	
6	971099	8	Flange lock nut	
7	968435	4	Flange screw	